描述

MX4320T 是一款用于恒压/恒流模式开关电源应用的高集成度解决方案。MX4320T 包含一个 2.5V 电压基准和两个运算放大器。该 2.5V 电压基准与一个运算放大器配合使用，可作为适配器和电池充电器中的理想电压控制器。该低电压基准与另一个运算放大器配合使用，可作为用于输出低侧电流检测的理想限流器。MX4320T 提供 SOT26 封装。

特性

- ♦ 恒压与恒流控制
- ♦外部元件数量少
- ♦补偿简便
- ♦低供电电流：260uA
- ♦高精度内部电压基准：2.5V
- ♦工作供电电压：3.5V 至 48V
- ♦低电流检测阈值：40mV

应用

- ♦交流/直流适配器
- ♦电池充电器
- ♦ LED驱动器

通用信息

订购信息

产品信号	描述
MX4320T	SOT23-6
MPQ	3000pcs

封装功耗

Package	RθJA（℃/W）
SOT23-6	200

极限值

参数	值
VCC	-0.3 to 60V
VOUT	-0.3 to VCC
VSENSE, VVCTRL	-0.3 to 18V
Junction temperature	150℃
Storage temperature, Tstg	-40 to 150℃
Leading temperature （soldering，10secs）	260℃
ESD Susceptibility HBM	±2000V

Stresses beyond those listed in Absolute Maximum Ratings may cause permanent damage to the device. Exposure to absolute maximum rating conditions for extended periods may affect reliability. Functional operation of the device at any conditions beyond those indicated in the Recommended Operating Conditions section is not implied.

丝印信息

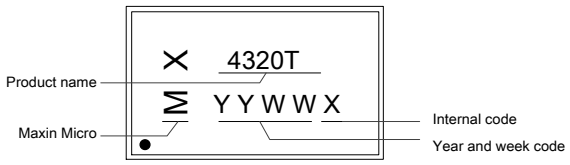

推荐工作条件

Symbol	Parameter	Range
VIN、CTRL	POWER supply	3.5~48V
Junction temperature		-40~125℃
P_{D_MAX}	Power dissipation	0.59W

GENERAL DESCRIPTION

The MX4320T is a highly integrated solution for a constant voltage/constant current mode SMPS application. The MX4320T contains one 2.5V voltage reference and two operational amplifiers. The 2.5V voltage reference, combined with one

operational amplifier, makes of an ideal voltage controller for use in adapters and battery chargers. The low voltage reference, combined with another operational amplifier, makes of an ideal current limiter for output low side current sensing. The MX4320T is available in SOT26 package.,

FEATURES

- ♦ Constant Voltage and Constant Current Control
- ♦ Low External Component Count
- ♦ Easy Compensation
- ♦ Low Supply Current: 260uA
- ♦ Precision Internal Voltage Reference: 2.5V
- ♦ Operating Supply Voltage: 3.5V to 48V
- ♦ Low Current Sense Threshold: 40mV

APPLICATIONS

♦ AC/DC Adapters

♦ Battery Chargers

♦ LED Drivers

GENERAL INFORMATION

Ordering information

Part Number	Description
MX4320T	SOT23-6
MPQ	3000pcs

Package dissipation rating

Package	RθJA（°C/W）
SOT23-6	200

Absolute maximum ratings

Parameter	Value
VCC	-0.3 to 60V
VOUT	-0.3 to VCC
VSENSE, VVCTRL, VICTRL	-0.3 to 18V
Junction temperature	150℃
Storage temperature, Tstg	-40 to 150℃
Leading temperature （soldering，10secs）	260℃
ESD Susceptibility HBM	±2000V

Stresses beyond those listed in Absolute Maximum Ratings may cause permanent damage to the device. Exposure to absolute maximum rating conditions for extended periods may affect reliability. Functional operation of the device at any conditions beyond those indicated in the Recommended Operating Conditions section is not implied.

Marking information

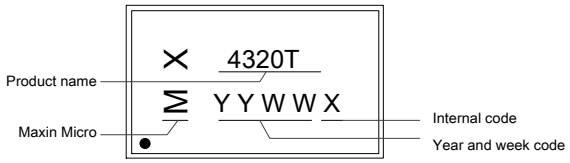

Recommended operating condition

Symbol	Parameter	Range
VIN、CTRL	POWER supply	3.5~48V
Junction temperature		-40~125℃
$P_{D\ MAX}$	Power dissipation	0.59W

Terminal Assignments

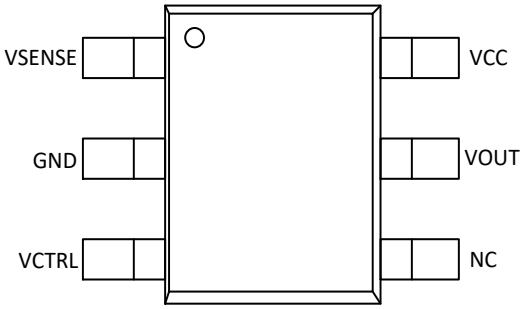

Pin information

PIN name		Description
1	VSENSE	Input pin of the current control loop .
2	GND	Ground.
3	VCTRL	Input pin of the voltage control loop .
4	NC	No connect.
5	VOUT	Output pin. Sinking current only .
6	VCC	Power Supply .

Block Diagram

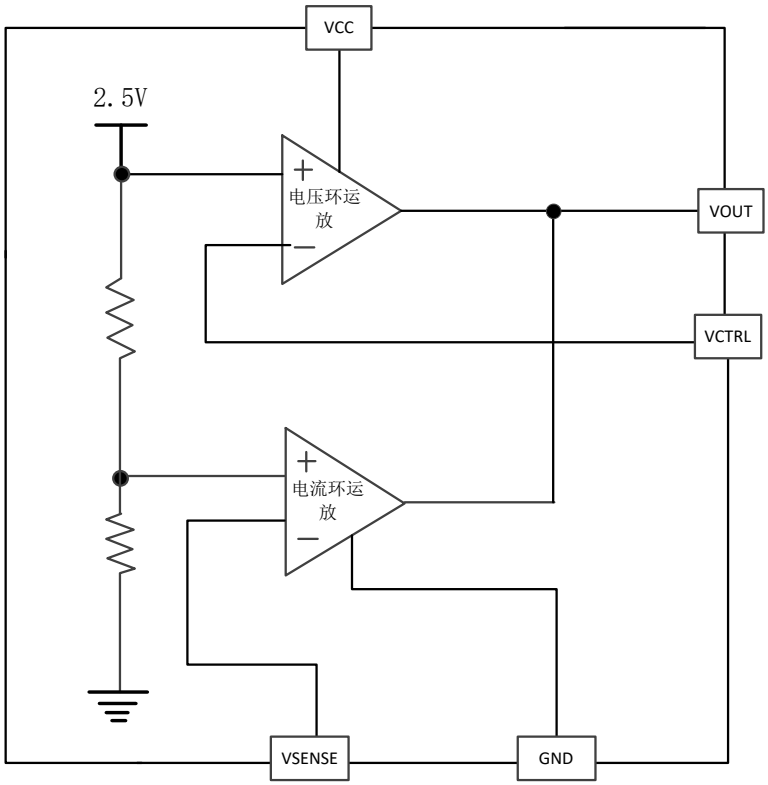

Electrical characteristics

（TA=25℃，VIN=20V， unless otherwise noted）

Symbol	Parameter	Test condition	Min	Typ.	Max	Unit
TOTAL CURRENT CONSUMPTION						
ICC	Total Supply Current Not Including the Output Sinking Current	VICTRL=VSENSE=0V, VOUT=Open		260		μA
VOLTAGE CONTROL LOOP						
Gmv	Transconduction Gain (VCTRL). Sink Current Only		1	3.5		mA/mV
VREF	Active threshold	Voltage Control Loop Reference		2.50		V
IIBV	Off threshold	Input Bias Current (VCTRL)		25		nA
CURRENT CONTROL LOOP						
VSENSE	Current Control Loop Reference			40		mV
OUTPUT STAGE						
VOL	Low Output Voltage at 2mA Sinking Current			30		mV
IOS	Output Short Circuit Current. Sink Current Only	VOUT=4V		3		mA

Typical Applications Circuit

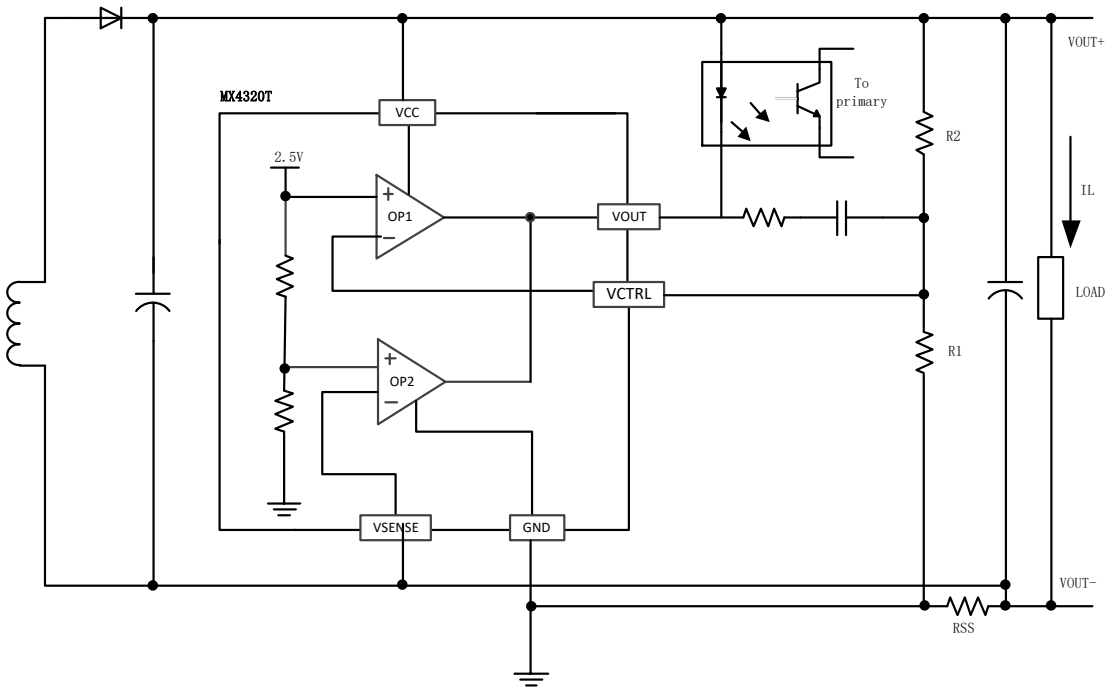

$$V_{OUT} = V_{REF} \times \frac{R_1 + R_2}{R_1} - (I_L \times R_{SS})$$

$$I_{LIMIT} = \frac{V_{SENSE} \times V_{REF}}{(V_{SENSE} + V_{REF}) \times R_{SS}}$$

Package information

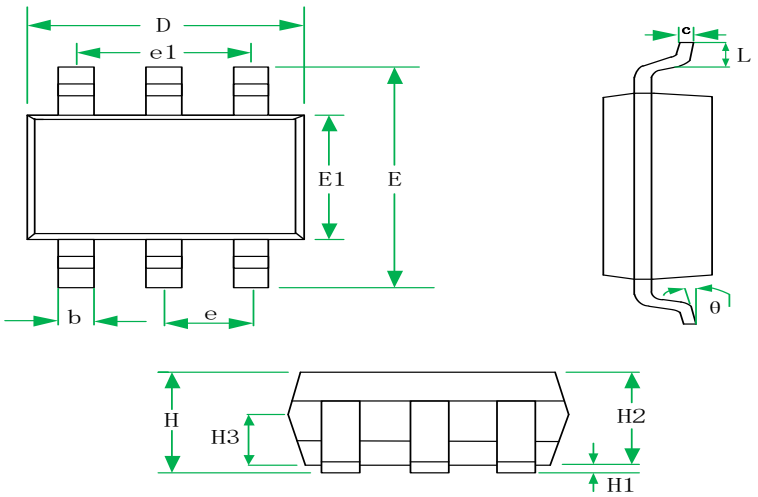

SYMBOL	MILLIMETERS			INCHES		
	MIN	NOM	MAX	MIN	NOM	MAX
H	1.07	1.16	1.25	0.042	0.046	0.049
H1	0.02	0.06	0.10	0.001	0.002	0.004
H2	1.05	1.10	1.15	0.041	0.043	0.045
H3	0.60	0.65	0.70	0.024	0.026	0.028
b	0.30	0.40	0.50	0.012	0.016	0.020
c	0.102	0.152	0.202	0.004	0.006	0.008
D	2.82	2.92	3.02	0.111	0.115	0.119
E	2.65	2.80	2.95	0.104	0.110	0.116
E1	1.50	1.60	1.70	0.059	0.063	0.067
e	0.95BSC			0.037BSC		
e1	1.90BSC			0.075BSC		
L	0.30	0.40	0.50	0.012	0.016	0.020
θ	0	4°REF	8°	0	4°REF	8°

SOT23-6 for MX4320T

Tape and Reel Information (unit in mm)

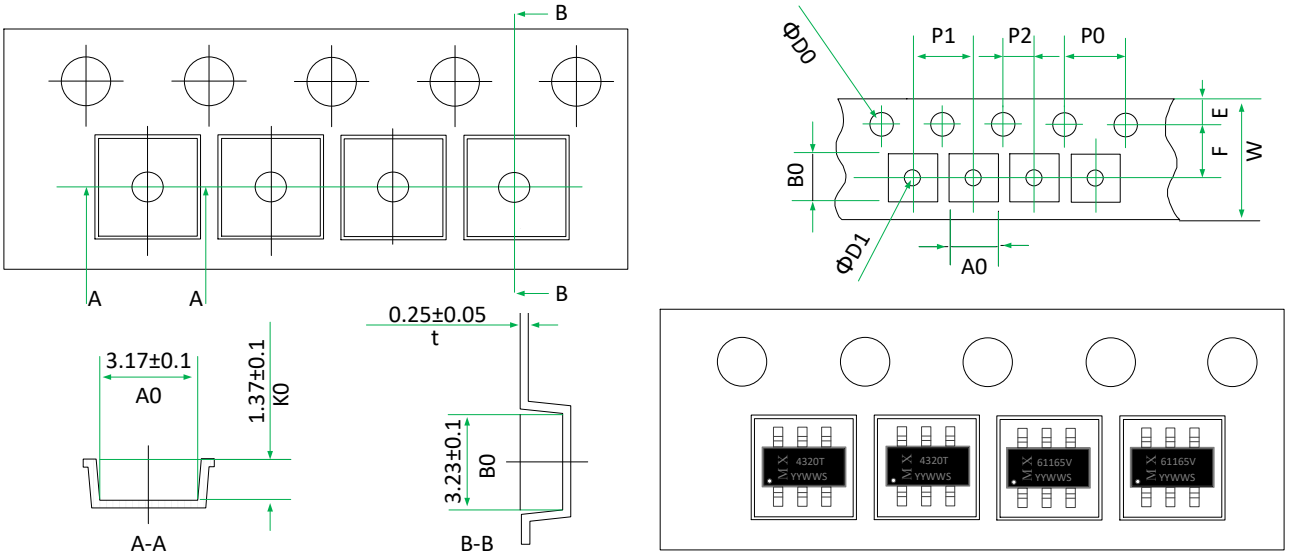

Symbol	W	E	F	ΦD0	ΦD1	P0	P1	P2	A0	B0	K0	t
MAX	8.10	1.85	3.55	1.60	1.25	4.10	4.10	2.05	3.27	3.33	1.47	0.30
MIN	7.90	1.65	3.45	1.40	1.0	3.90	3.90	1.95	3.07	3.13	1.27	0.20

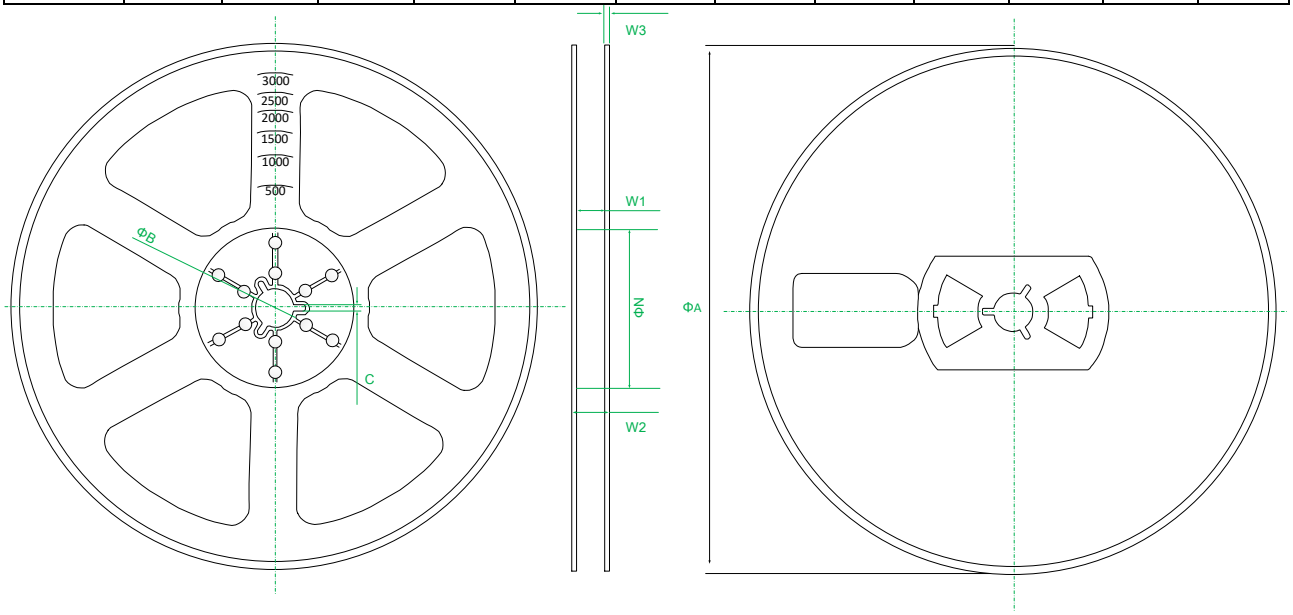

Symbol	ΦA	ΦN	ΦB	C	W1	W2	W3
MAX	180	56	13.5	2.50	9.9	12	1.8
MIN	176	52	13.0	1.90	8.4		1.0

Restrictions on Product Use

◆ MAXIN micro is continually working to improve the quality and reliability of its products. Nevertheless, semiconductor devices in general can malfunction or fail due to their inherent electrical sensitivity and vulnerability to physical stress. It is the responsibility of the buyer, when utilizing MAXIN products, to comply with the standards of safety in making a safe design for the entire system, and to avoid situations in which a malfunction or failure of such MAXIN products could cause loss of human life, bodily injury or damage to property.

◆ In developing your designs, please ensure that MAXIN products are used within specified operating ranges as set forth in the most recent MAXIN products specifications.

◆ The information contained herein is subject to change without notice.

Version update information

V10 pre-release version by LYH.